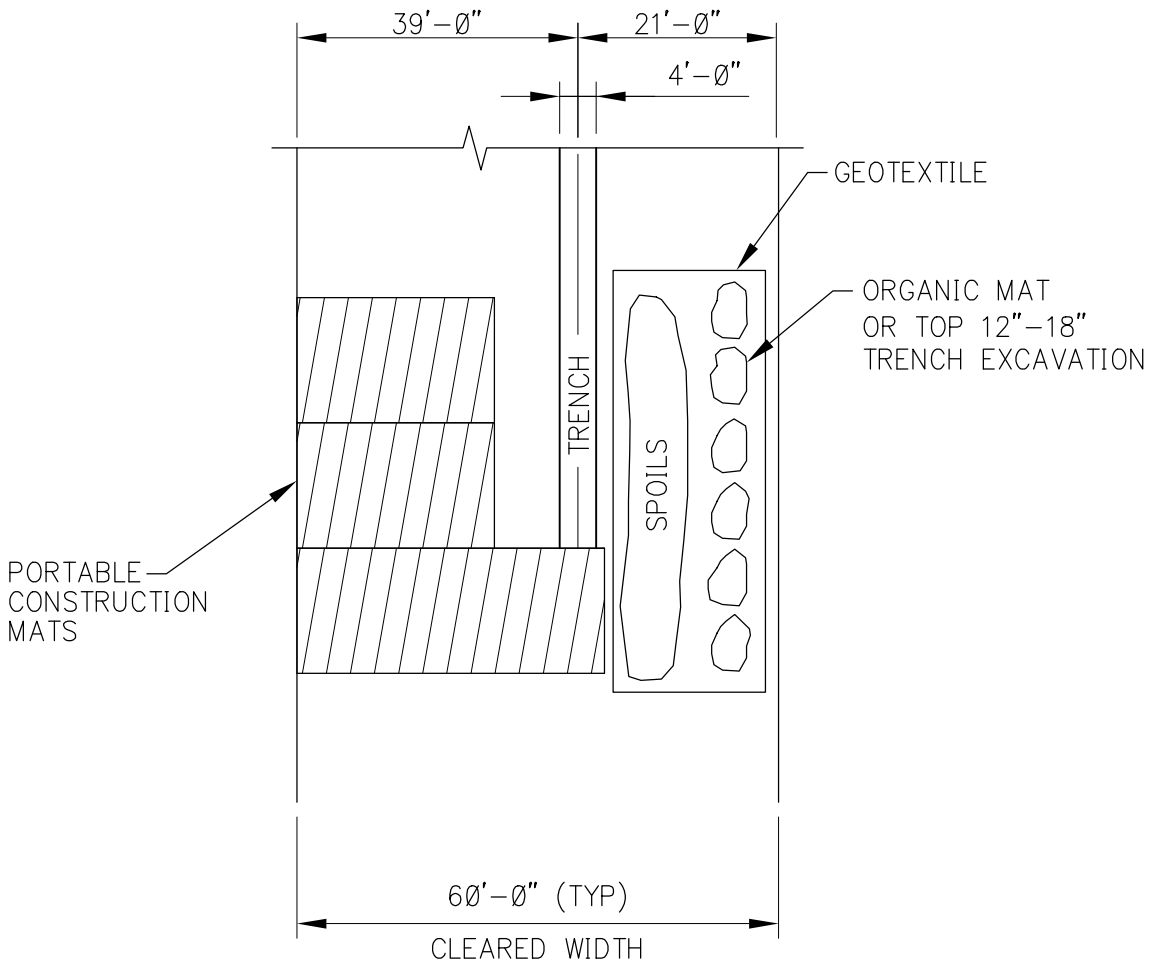

PLAN VIEW

NOT TO SCALE

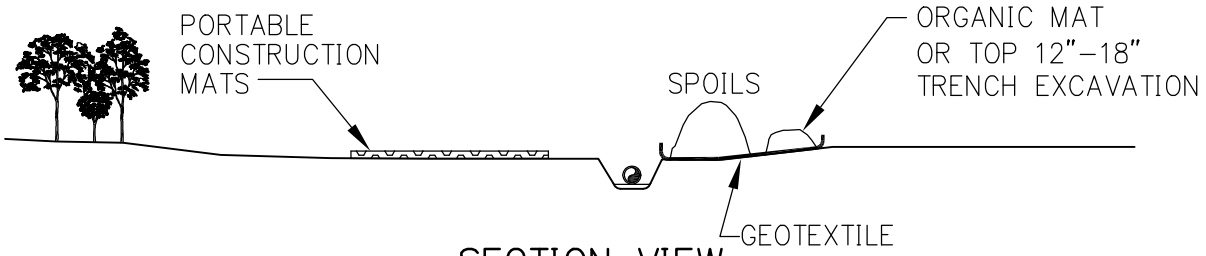

SECTION VIEW

NOT TO SCALE

PURPOSE: NATURAL GAS TRANSMISSION	TYPICAL PLAN & SECTION FOR UNFROZEN WETLANDS	PROPOSED KENAI-KACHEMAK NATURAL GAS PIPELINE
		LOCATION:
		BOROUGH: KENAI
		APPLICATION BY: MARATHON OIL COMPANY & UNOCAL CORPORATION
	FIGURE 12	SHEET 1 OF 1 DATE: Ø4/11/Ø2
DWG #: 25183GØ22		