ABBREVIATIONS:

BGP – BEGINNING OF PIPELINE
D.O.T. – DEPARTMENT OF TRANSPORTATION
EOP – END OF PIPELINE
MMSCFD – MILLION STANDARD CUBIC FEET PER DAY
ROW – RIGHT OF WAY
SHT – SHEET
THD – THREADED
VTA – VENT TO ATMOSPHERE

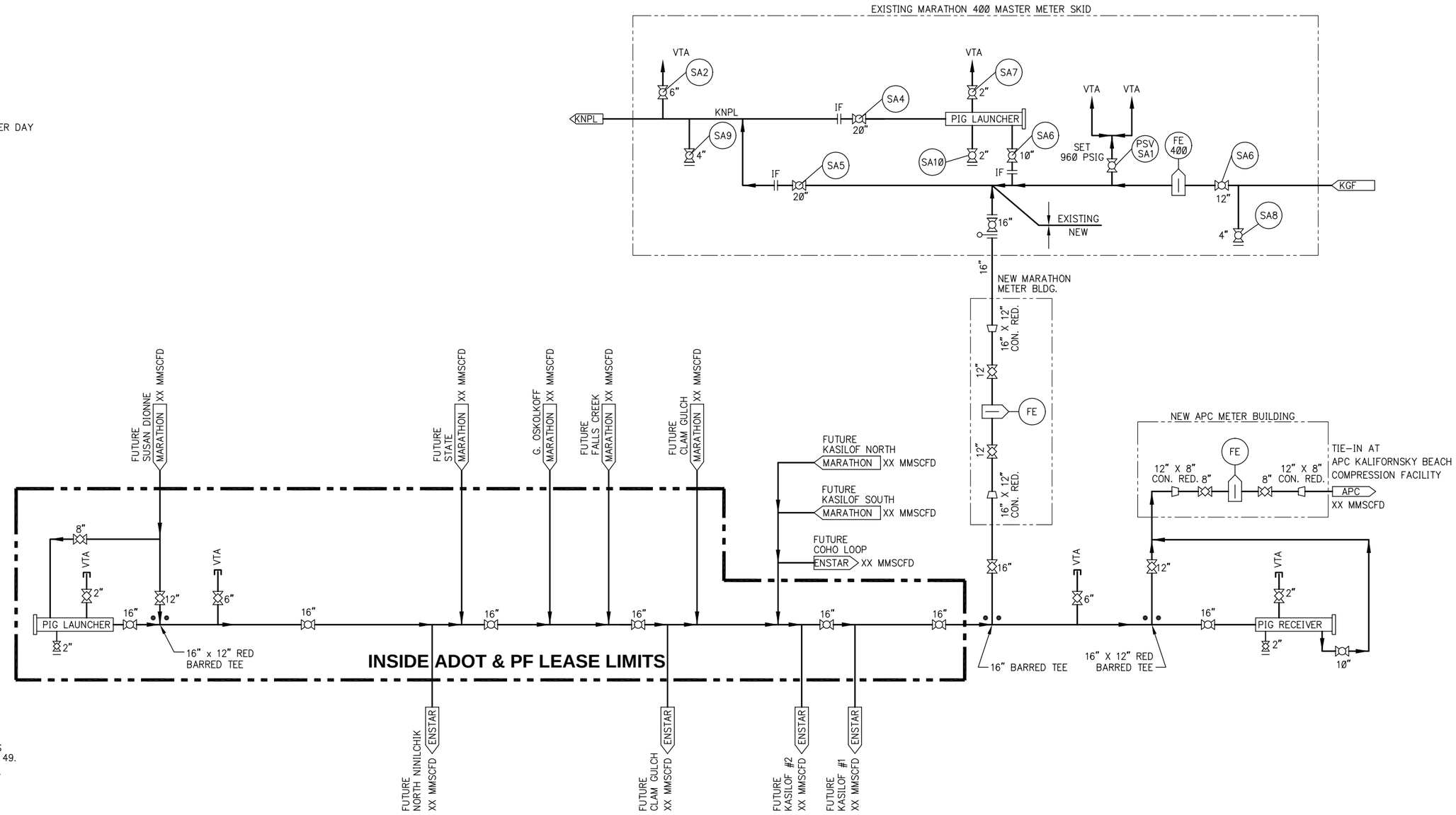

NOTES:

1. CURRENT BLOCK VALVE SPACING ASSUMES CLASS 3 PIPELINE DESIGNATION PER CFR 49.
2. MAIN LINE BLOCK VALVES ARE FULL PORT FOR PIGGING.
3. NO COMPRESSION ON ANY LINES.
4. FOR PIPING DETAILS, SEE DRAWING M-01 SHEET 2.
5. LATERALS MAY BE PIGGED.
6. NEW FACILITIES FOR TIE-IN REQUIRED AT EXISTING ENSTAR KALIFONSKY BEACH COMPRESSION FACILITY.
7. OVER PRESSURE PROTECTION AND PIPELINE PRESSURE/FLOW CONTROL IS PROVIED PRIOR TO INLET PIPING.
8. MAIN LINE BLOCK VALVE VENT/BYPASS PIPING SHOWN ON DRAWING M-01 SHT 2 DETAIL 4.

REFERENCE DWG NO/SHT NO:

REV	DATE	REVISIONS	BY	CHK	JOB ENGR	PROJ ENGR	CUST APP
0A	05/03/02	RE-ISSUED FOR PERMITTING	RFH	SDL	SDL	PAC	
0	03/20/02	ISSUED FOR PERMITTING	TKM	SDL	PC	JDM	
B	03/11/02	RE-ISSUED FOR REVIEW	MMHN	SDL			
A	02/05/02	ISSUED FOR REVIEW	MMHN	SDL			

Baker
Michael Baker Jr., Inc.
A Unit of Michael Baker Corporation
4601 Business Park Blvd., Suite 42
Anchorage, Alaska 99503
Phone: (907) 273-1600
Fax: (907) 273-1699

KENAI-KACHEMAK PIPELINE PROJECT
PROCESS FLOW DIAGRAM
FIGURE 5

CADD FILE NO.	DATE:	SCALE:	DRAWN:	DESIGN:	CHECKED:	APPROVAL:
25183M002	05/03/02	NONE	M. HINZ-NEASON	S. LUST	P. CARSON	

JOB NO:	DRAWING NO.	SHEET:	REV:
25183	M-01	1 OF 2	0A

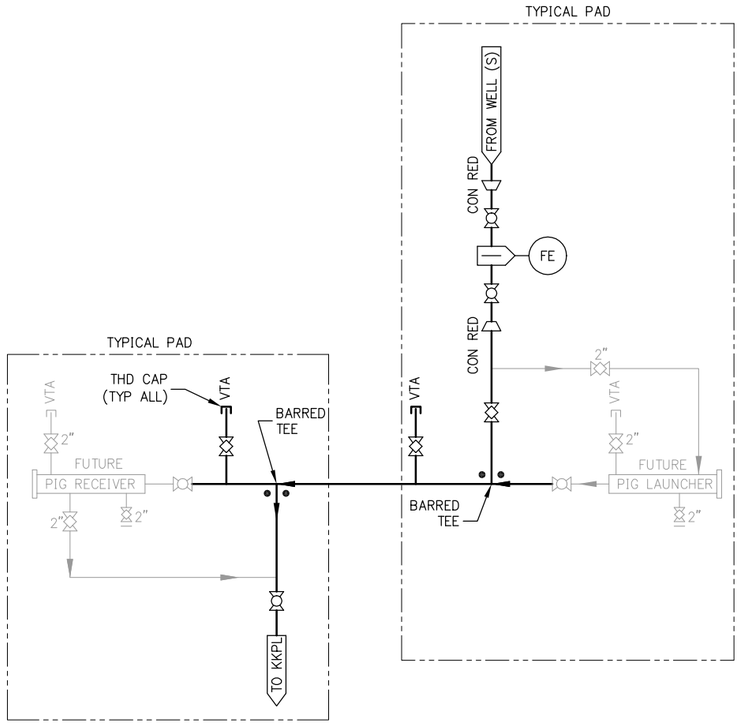

1 TYPICAL FOR ALL INLET LATERALS WITH LAUNCHER/RECEIVER

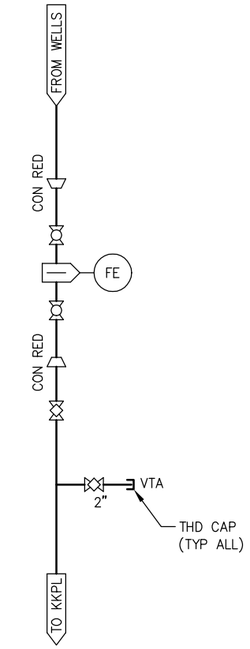

2 TYPICAL FOR INLET LATERALS WITHOUT LAUNCHER/RECEIVER

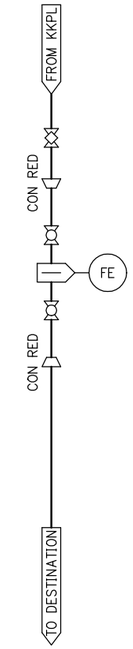

3 TYPICAL OUTLET LATERAL

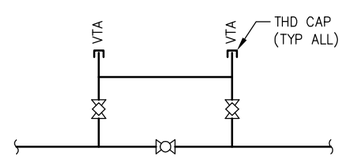

NOTE:
VENT VALVE SIZE VARIES
WITH MAIN LINE PIPE DIAMETER

4 TYPICAL BYPASS VENT

REFERENCE DWG NO/SHT NO:

REV	DATE	REVISIONS	BY	CHK	JOB ENGR	PROJ ENGR	CUST APP
0A	04/29/02	RE-ISSUED FOR PERMITTING	RFH	SDL	SDL	PAC	
0	03/20/02	ISSUE FOR PERMITTING	TKM	SDL	PC	JDM	
A	02/05/02	ISSUED FOR REVIEW	MMHN	SDL			

Baker
Michael Baker Jr., Inc.
A Unit of Michael Baker Corporation
4601 Business Park Blvd., Suite 42
Anchorage, Alaska 99503
Phone: (907) 273-1600
Fax: (907) 273-1699

KENAI-KACHEMAK PIPELINE PROJECT
PROCESS FLOW DIAGRAM
LATERAL DETAILS - FIGURE 5

CADD FILE NO.	DATE:	SCALE:	DRAWN:	DESIGN:	CHECKED:	APPROVAL:
25183M003	04/29/02	NONE	T. MASHL	S. LUST	P. CARSON	

JOB NO:	DRAWING NO.	SHEET:	REV:
25183	M-01	2 OF 2	0A